Torque supports

Encoder mounting attachments	Fixing components for hollow shaft encoders

Order Code : YY UV

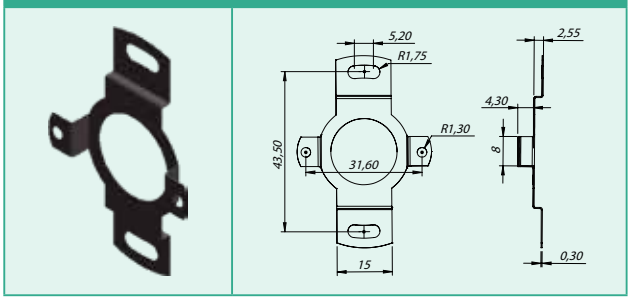

Order Code : YY AKR3

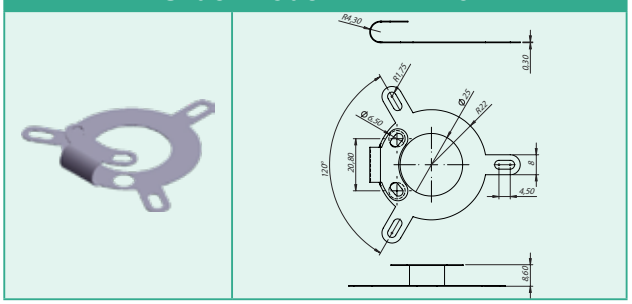

Order Code : YY AKS

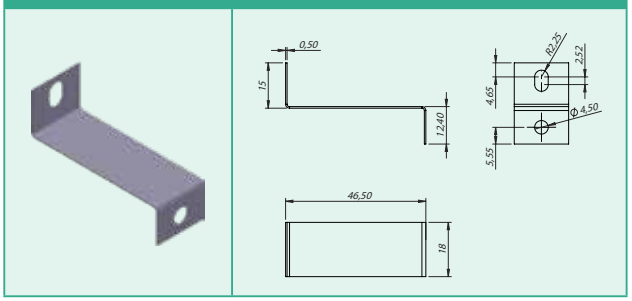

Order Code : YY RST

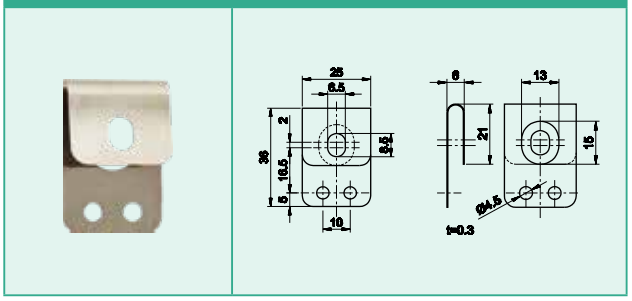

Order Code : YY SCR

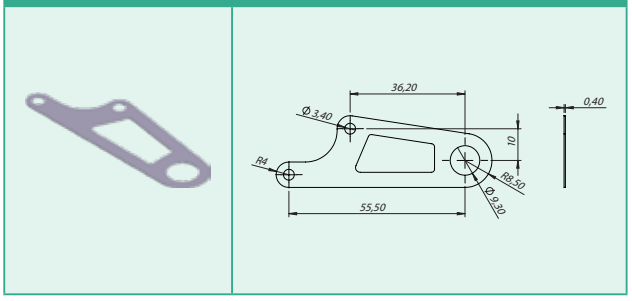

Encoder mounting attachments	Fixing components for hollow shaft encoders

Order Code : YY ASTK

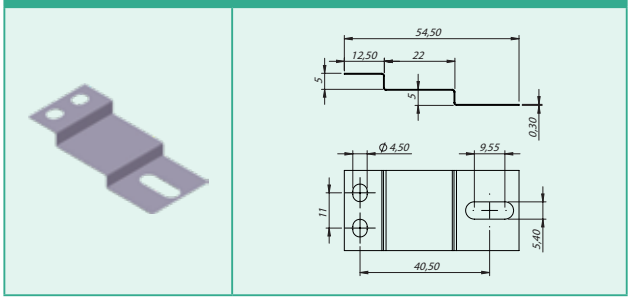

Order Code : YY SS

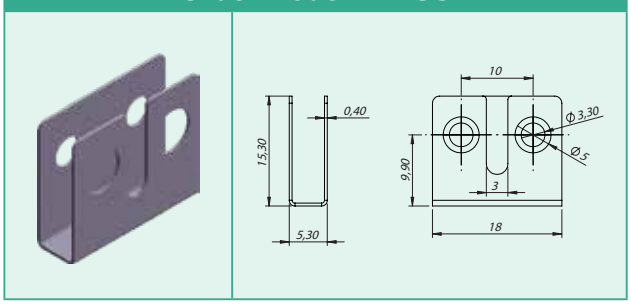

Order Code : YY KKBL

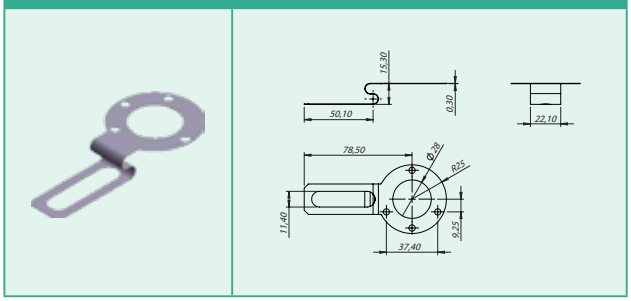

Order Code : YY KLM

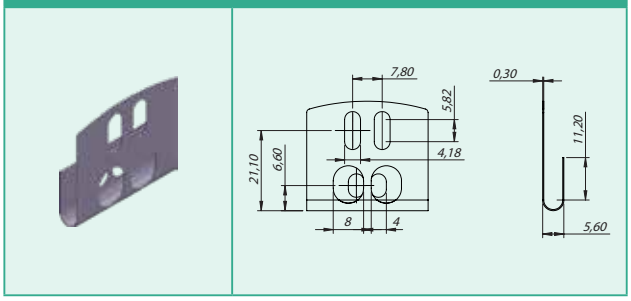
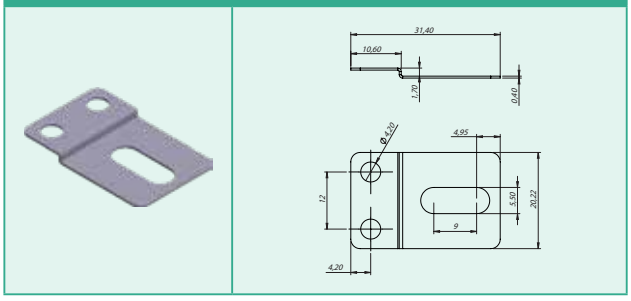
Order Code : YY MNT