Absolute Rotary Encoder

FNC PM28 SSI



Features

- **Non-Contact Magnetic Sensing Technology**
- **360° Rotary Angle Measurement**
- **SSI Output**
- **Contactless Operation**
- **Multiple Shaft Configurations**
- **Designed for Motor Feedback Applications**

Applications

- Electric Motor Position Feedback
- Industrial Automation
- Rotary Actuators
- Valve Position Control
- Robotics
- Mobile Machinery
- Mechanical Positioning Systems

Technical data - electrical ratings

Measurement Range	0…360°
Resolution	0.1°
Accuracy	<±0.5°
Repeatability	≤ ±0.1°
Response Frequency	≥100 Hz
Maximum Speed	Up to 3,000 rpm
Operating Temperature	-20…+85 °C
Protection Rating	IP54
Supply Voltage	5…30 VDC
Startup Time	≤100 ms
Reverse Polarity Protection	Yes
Overvoltage Protection	Yes
Short-Circuit Protection	Yes

Technical data - mechanical design

Dimensions	ø28 mm
Mount Diameter	38 mm
Materials	Housing: ABS (plastic) Shaft : Stainless Steel

FNC PM28 SSI

Mechanical Dimensions

1 6 mm D form shaft version

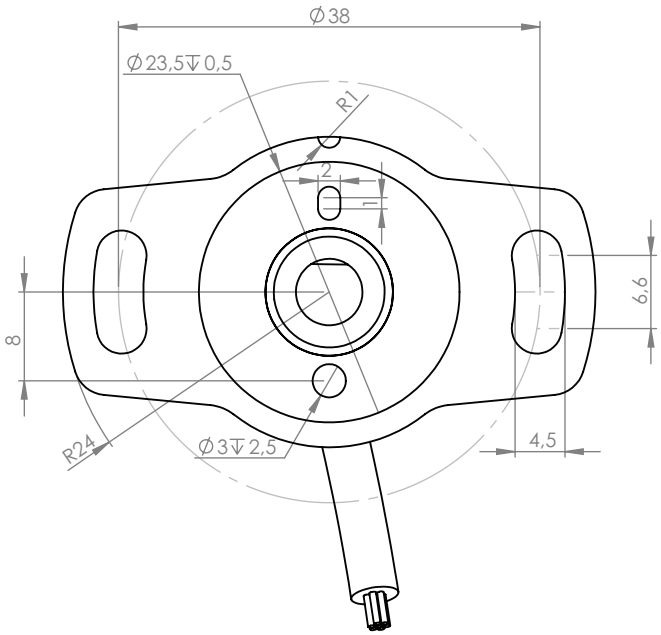

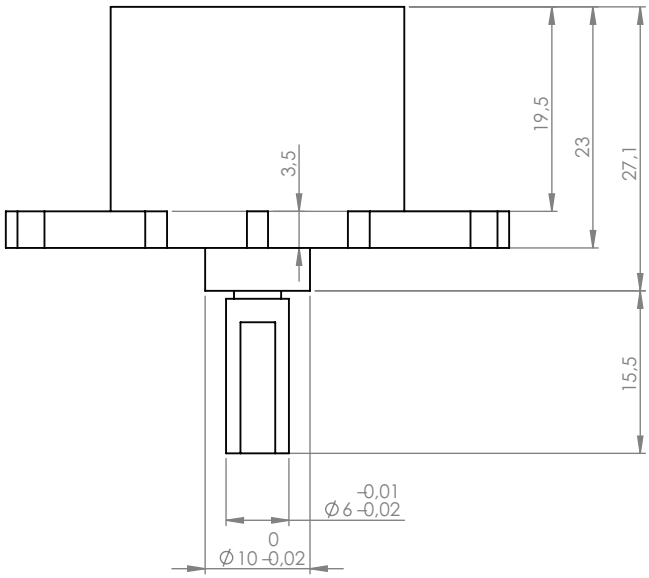

2 6 mm shaft, 8 mm notch version 6L12

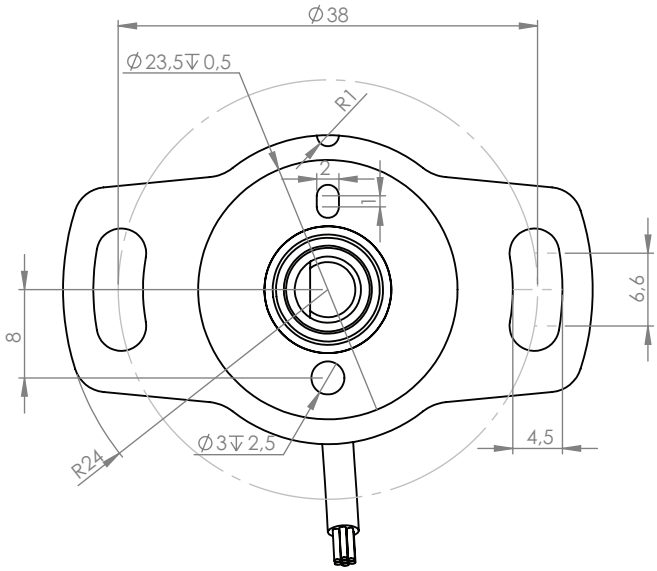

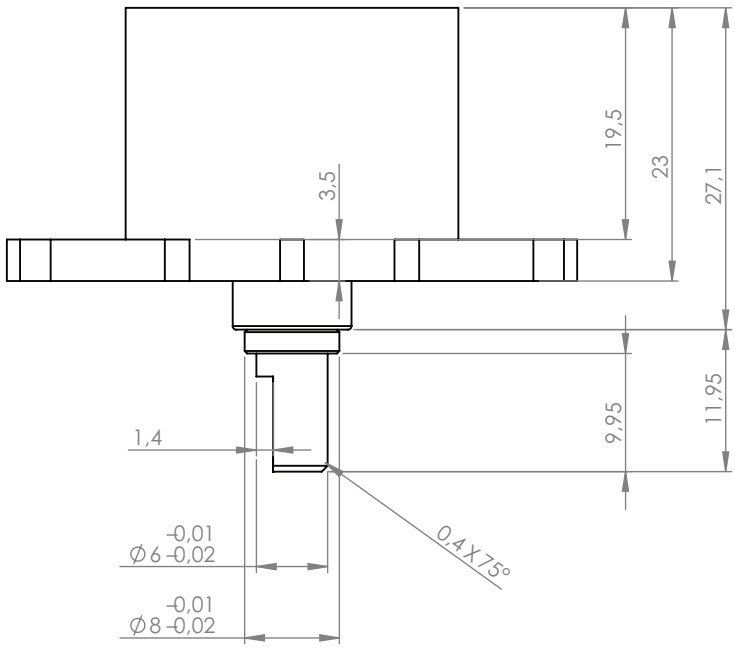

FNC PM28 SSI

Mechanical Dimensions

3 **6 mm shaft, 1 mm notch version 6L12**

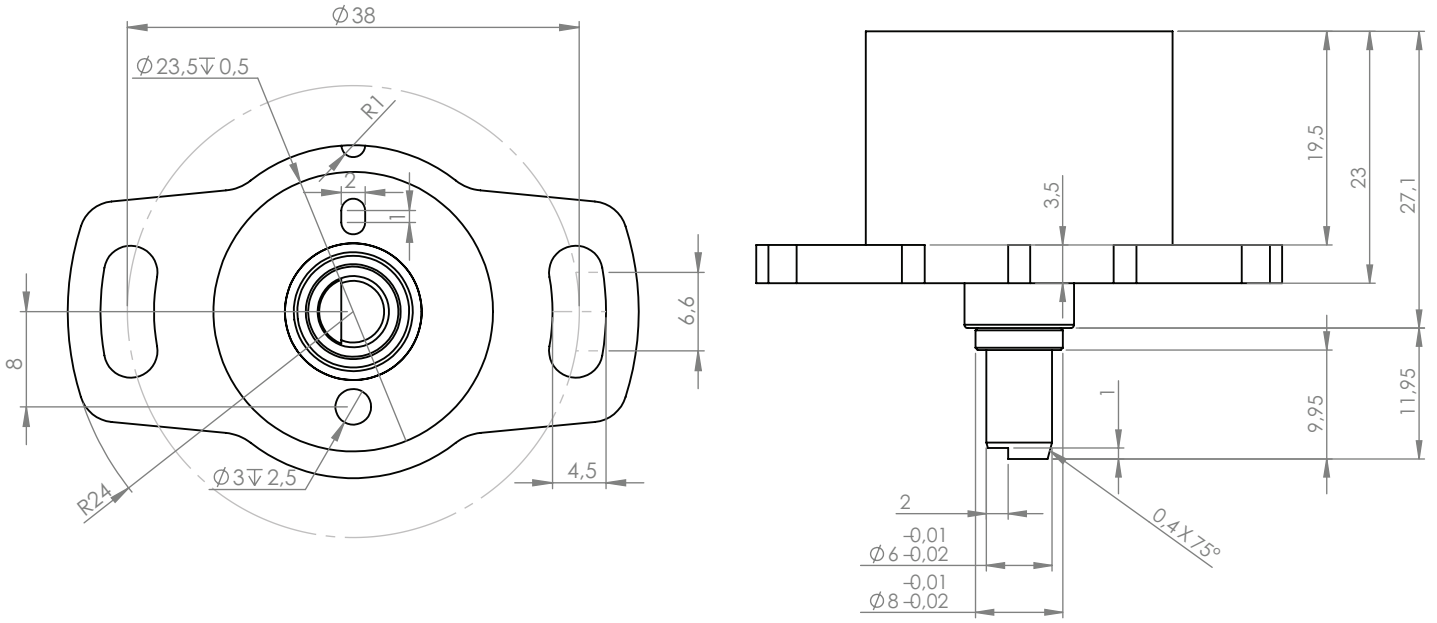

Absolute Rotary Encoder

FNC PM28 SSI

Pulse Diagram

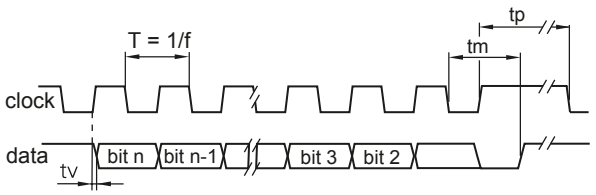

Clock frequency, f	50...2000 kHz for SSI
Code	Binary or Gray
Status and parity bit	On request
Monoflop time tm	>15µs
Clock time out	Programmable at factory

Cable Connection

Function	Color	Renk
+VB	Brown	Kahve
GND	White	Beyaz
DATA+	Orange	Turuncu
DATA-	Orange-Black	Turuncu-Siyah
CLOCK-	Blue	Mavi
CLOCK+	Blue-Black	Mavi-Siyah
DIRECTION	Gray-Black	Gri-Siyah
PRESET	Gray	Gri
Shield	Black	Siyah

Part Number for

FNC **PM** **28** **1** **AS** **360** **S21** **5V** **C** – **R08**

Housing
28 : 28 mm

Shaft version
1 : 6 mm D type version
2 : 6 mm shaft, 8 mm notch version
3 : 6 mm shaft, 1 mm notch version

Interface
AS : Absolute SSI

Measuring Range
360 : 360° standard
xxx : optional 5° to 350° measuring range (please select)

Electrical Connections:
R08 : 8 cm cable

Direction of Rotation
C : Clockwise
CC : Counter clockwise

Supply Voltage
5V : 5V
30V : 30V

Output Type
S21 : Singleturn up to 21 bit