Solid shaft with clamping or synchro flange
Magnetic single- or multiturn encoders

FNC AC 58B Bus Cover Series

Canopen & Profibus

Features

- **Encoder single- or multiturn / bus cover**
- **Magnetic sensing**
- **Single turn Resolution: 12...19 bit**
- **Multi turn 4...32bit**
- **Clamping flange or synchro flange**
- **Permanent check of code continuity**
- **Extreme resistance to shock and vibration**
- **Modular fieldbus interfaces**
- **Profibus / CANopen®**

Technical data - electrical ratings

Voltage supply	5.5VDC to 30VDC 4.75VDC to 5.5VDC 8VDC to 30VDC
Protection:	Output short circuit protection. Reverse polarity protection
Consumption w/o load	≤50 mA (24 VDC)
Initializing time typ.	170 ms after power on
Interface	Profibus / CANopen® /
Resolution (steps/turn)	9 to 16 bit
Number of revolution	4, 8, 12, 16, 24, 32,
Code	Binary
Code sequence	CW default, programmable
Absolute accuracy	±0,35°
Device adress	Rotary switch in bus cover
Interference immunity	DIN EN 61000-6-2
Emitted interference	DIN EN 61000-6-4
Approval	CE
Programmable parameters	Steps per revolution Number of revolutions Preset Scaling Rotating direction
Diagnostic functions	Position or parameter error Multiturn sensing
Status indicator	RED&GREEN-LED integrated in bus cover

Technical data - mechanical design

Dimensions (flange)	ø58 mm
Shaft loading	≤140 N axial ≤240 N radial
Protection DIN EN 60529	IP54, IP65
Operating speed	≤10000 rpm
Starting torque	≤0.025 Nm (IP 67)
Materials	Housing, Flange : Aluminium Shaft : Stainless steel
Shaft diameter:	10 mm (other diameters on request)
Bearings lifetime:	$2x10^9$ rev. at 100% of full rated shaft load (minimum)
Operating temperature	-25...+90 °C
Weight approx.	300 g
Connection	Bus cover
Relative humidity	95 %
Resistance	DIN EN 60068-2-6 Vibration 30 g, 10-2000 Hz DIN EN 60068-2-27 Shock 200 g, 6 ms

Accessories

Connectors and cables
CRM2312R M23 12 poles female connector or see page 160

Mounting coupling
PF481010 metal coupling or see page 158

Mounting accessories
SF58B spring or see page 156-157

Solid shaft with clamping or synchro flange
Magnetic single- or multiturn encoders 12 bit ST / 18 bit MT

Mechanical Dimensions

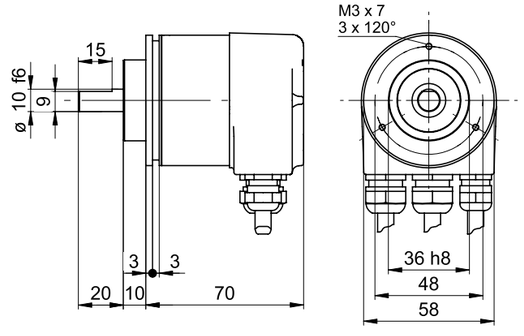
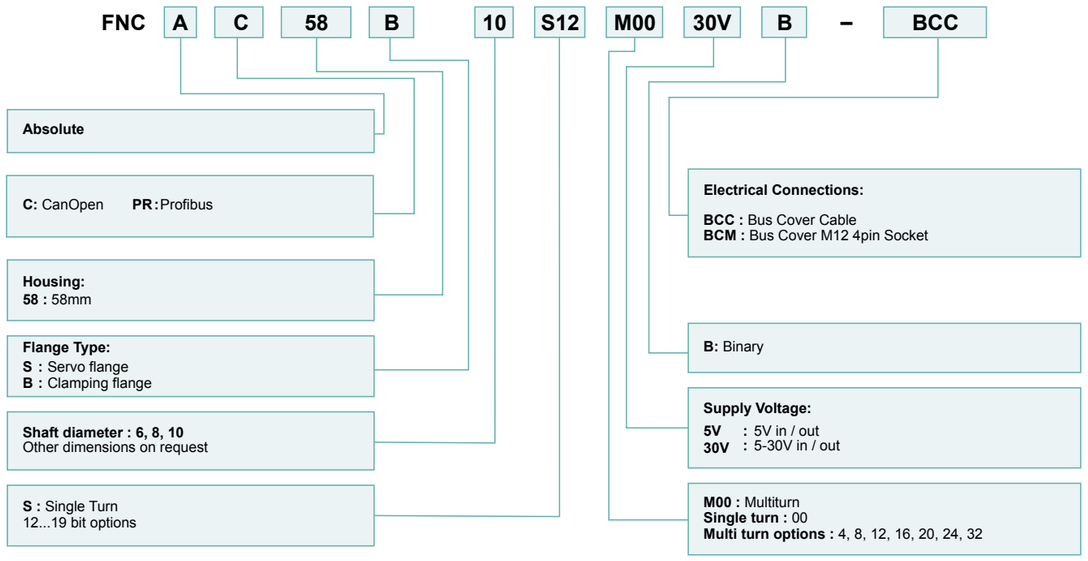
Encoder Part Number